Table 2.53

Coupling bands for corrugated steel pipe

Type Of Band	Cross Section	Angles	Bar, Bolt & Strap	Wedge Lock	Gaskets			Pipe End		
					O Ring	Sleeve or Strip	Mastic	Annular Plain	Helical	
									Plain	Reformed
Universal		X	X	X		X	X	X	X	X
Corrugated		X	X	X		X	X	X	X	X
Semi-Corrugated		X	X	X	X		X	X		X
Channel		X	X		X		X			X
Flat		X	X	X		X	X	X	X	X
Hat		X	X				X			X

Two-piece corrugated band joins length of annular riveted pipe.

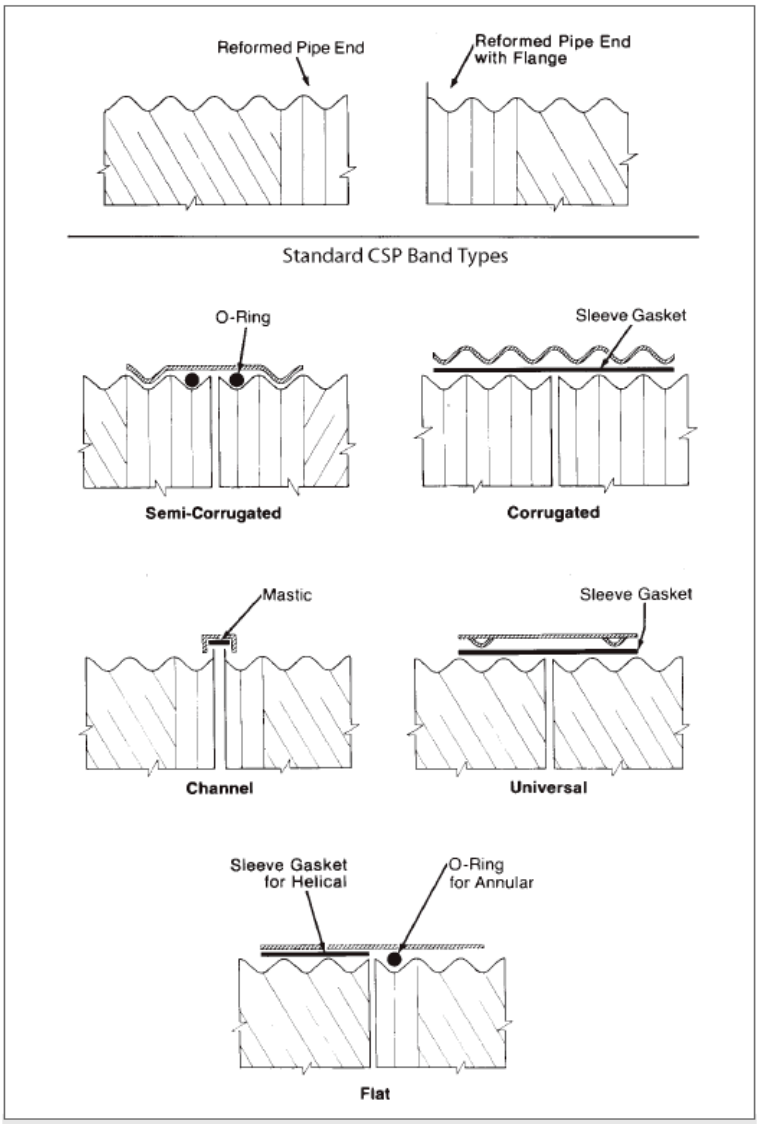

■ **Figure 2.20** Standard corrugated steel bands.

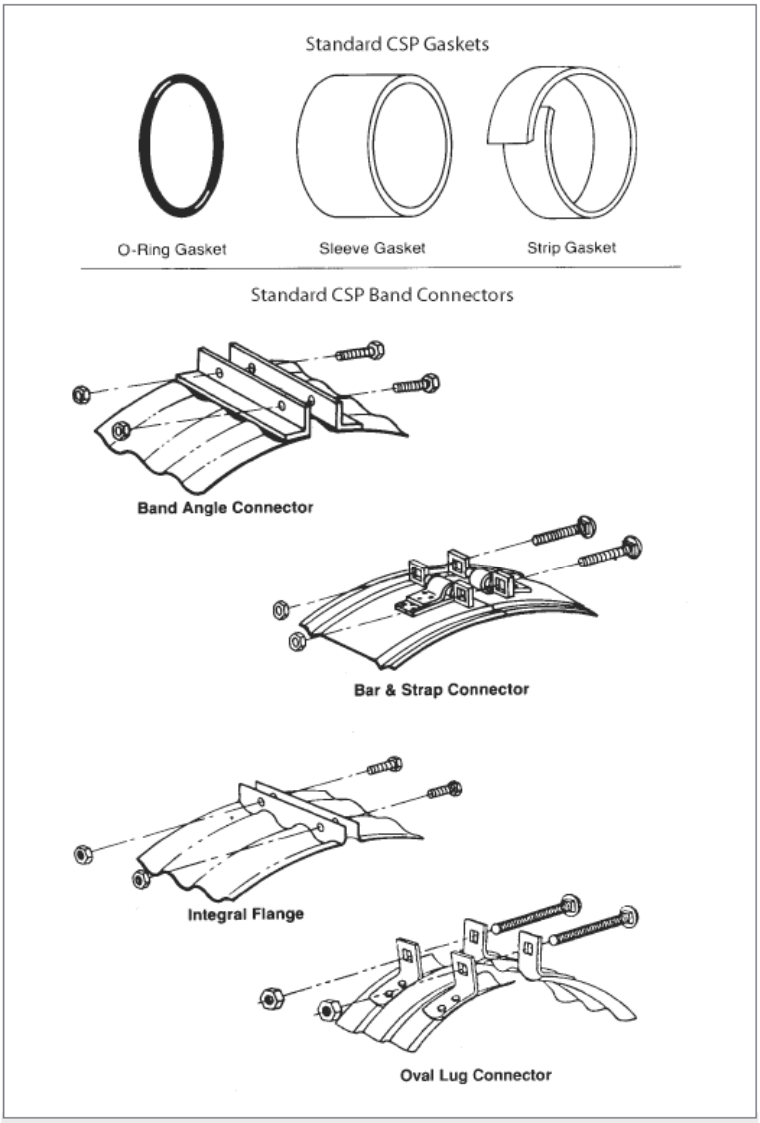

Figure 2.21 Standard corrugated steel pipe band connectors and gaskets.

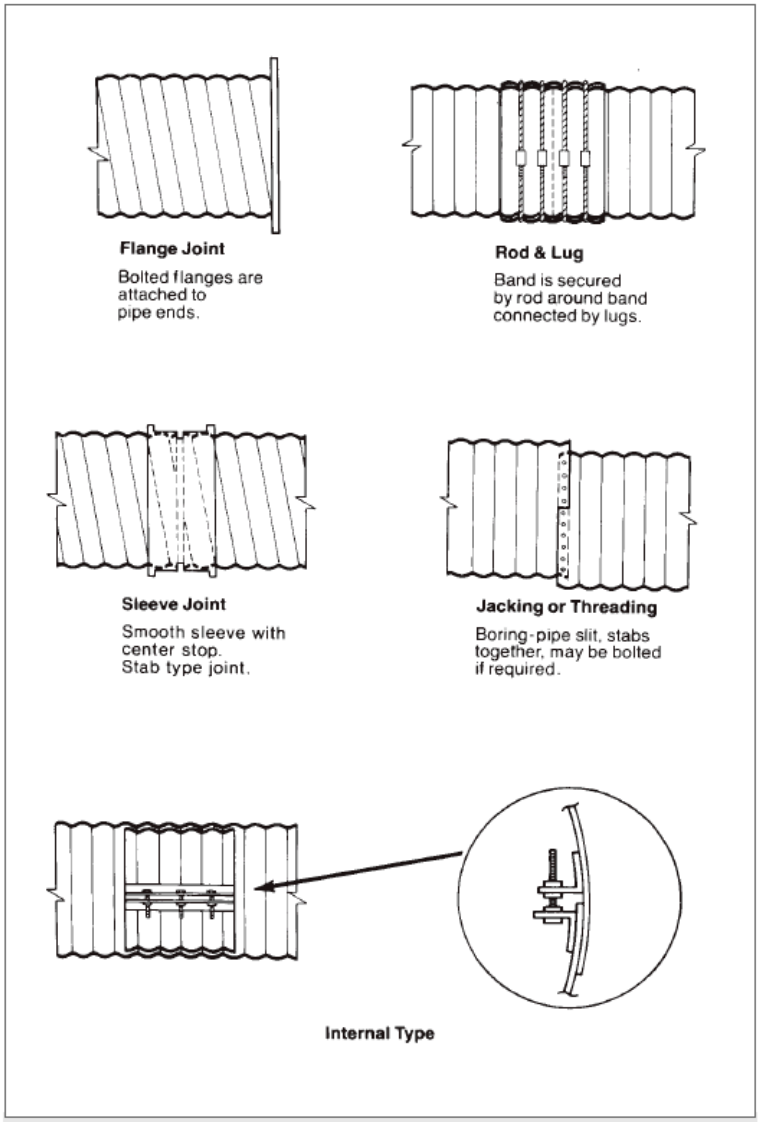

■ **Figure 2.22** Special connectors.